B&Z Technologies

Innovating to Excel

BZ1626LD1

WIDEBAND LNA, 16 - 26 GHz

Features

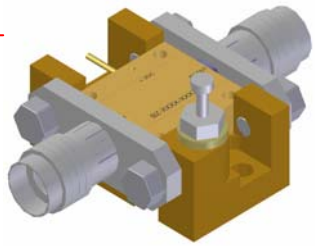

- **Noise Figure ≤2.3 dB**
- Unconditionally Stable at all temperatures
- Internally Regulated DC Voltage
- 50 Ohm Matched Input/Output
- Field Replaceable SMA connectors
- Drop in Package
- Excellent Group Delay and Phase Linearity
- 0.009 inches diameter RF In/Out feed through
- Operating Temp. -55 C to +85 C
- 3 Year Warranty

Options

- **Optimized Performance over Selected Bandwidth**
- Internally DC Block Input (Output DC Block Standard)
- Hermetically Sealed Package
- Improved Gain Flatness ±1.0 dB Max
- Improved IN and OUT VSWR
- Gain and Phase matching
- Lower Noise Figure (**Cryogenic Temp**)

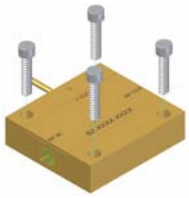

Specifications (23 °C)

Parameter	Min	Typ	Max	
Frequency Range	16	–	26	GHz
Noise Figure *			2.3	dB
Gain	30	31	–	dB
Gain Flatness	–		±1.2	dB
P1dB Output Power	5	–	–	dBm
Input VSWR	–		2.0:1	
Output VSWR	–		2.0:1	
Operating Temperature	-55	–	+85	°C
Third Order Intercept		16		dBm
Second Order Intercept		25		dBm
Group Delay 16-26 GHz		±10		psec
Voltage	+12	–		V
Current	–	170	195	mA

* Noise Sources used for measurement: 16– 18 GHz: HP346A, 18 –26 GHz: HP346C-K01
N.F. Uncertainty (approx. 0.3 dB). 0.2 dB due to ENR of HP 346C-K01, and 0.1 dB, due to gain modulation of the unit, caused by the HP 346C-K01 source impedance change In the ON and OFF state.
Noise Figures and other parameters degrade below 500 MHz.
Noise Figures at Cryogenic Temp, not given due to uncertainty of measurement for very low values. Call to discuss.

Performance Graphs

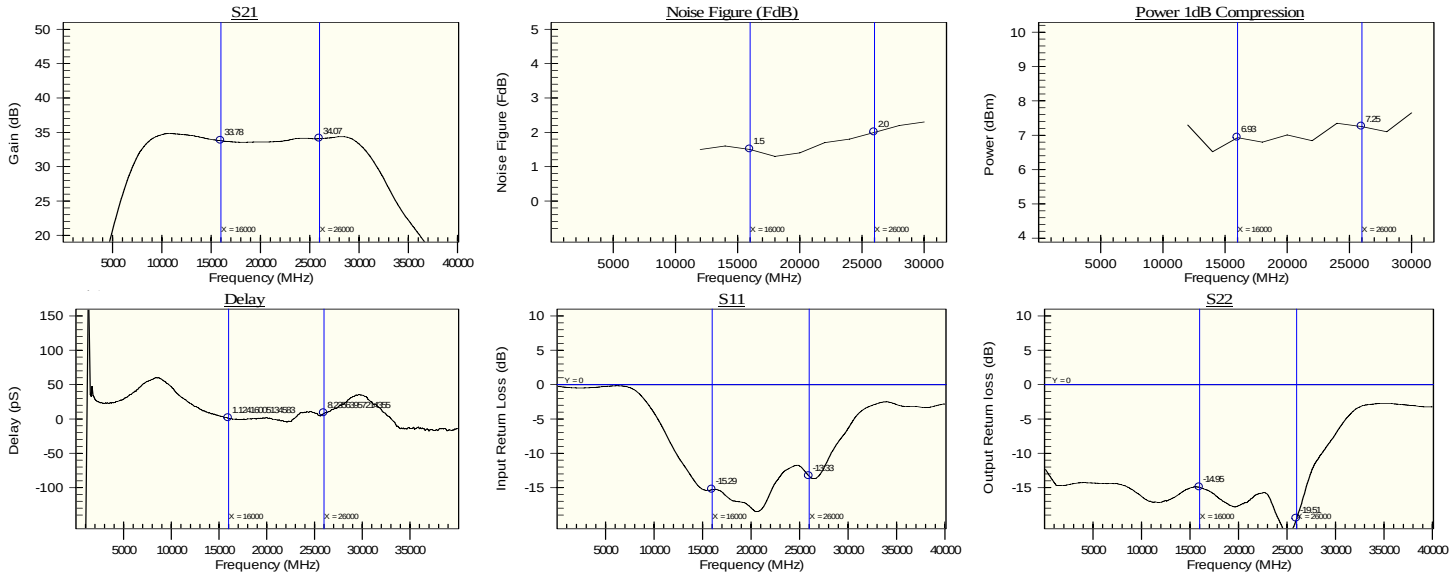

Outline Drawing

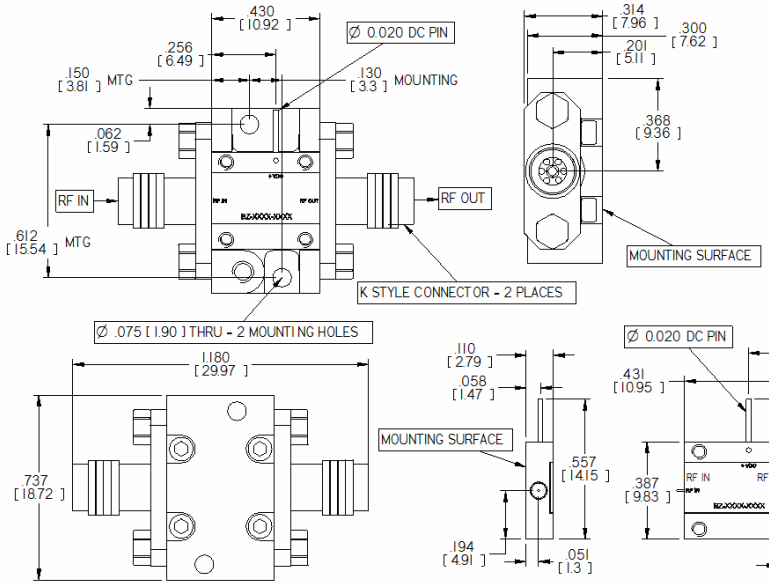

Mounting Drawing

00157

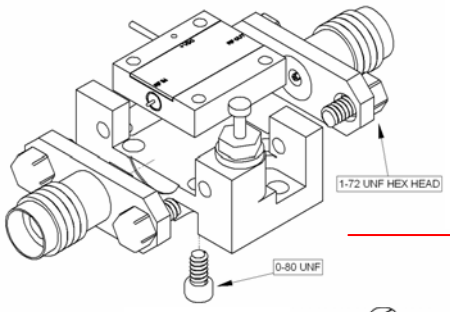

Drop In Module

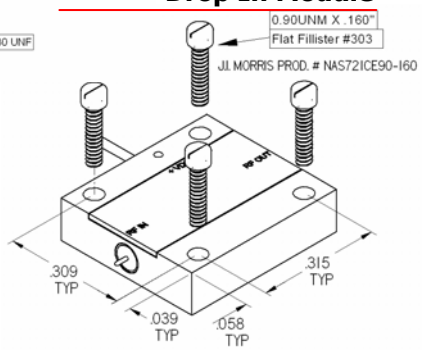

B&Z Technologies • 25 Health Sciences Drive • Stony Brook • New York 11790
Phone: (631) 331-0101 • Fax: (631) 331-0117 • info@bnztech.com • www.bnztech.com