B&Z TECHNOLOGIES
Stony Brook, New York 11790

State of the Art Microwave & Millimeter Wave Amplifier Technology

BZP140A

ULTRA WIDEBAND, Low Noise LNA, 0.1-40 GHz

Features

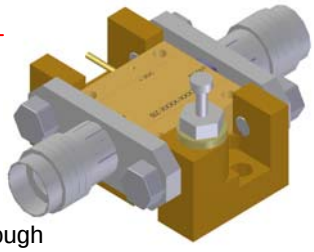

- **Noise Figure ≤ 5.5 dB. Typical**
- Unconditionally Stable at all temperatures
- Internally Regulated DC Voltage
- 50 Ohm Matched Input/Output
- Field Replaceable 2.92 connectors
- Excellent Group Delay and Phase Linearity
- 0.009 inches diameter RF In/Out feed through
- 3 Year Warranty

Options

- **Optimized Performance over Selected Bandwidth**
- Internally DC Block Input (Output DC Block Standard)
- Hermetically Sealed Package
- Improved Gain Flatness ±1.0 dB Max
- Gain and Phase matching
- Lower Noise Figure (**Cryogenic Temp**)

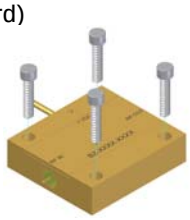

Specifications (23 °C)

Parameter	Min	Typ	Max	
Frequency Range	0.1	–	40	GHz
Noise Figure *			5.5	dB
Gain	26	27	–	dB
Gain Flatness			±2.5	dB
P1dB Output Power	8		–	dBm
Input VSWR	–		2.5:1	
Output VSWR	–		2.5:1	
Operating Temperature	-55	–	+85	°C
Third Order Intercept				dBm
Second Order Intercept				dBm
Voltage		+12		V
Current		175		mA

* Noise Sources used for measurement: 0.1– 18 GHz: HP346A, 18 – 40 GHz: HP346C K01 N.F. Uncertainty (approx. 0.2 dB). 0.1 dB due to ENR of HP 346C, and 0.1 dB, due to gain modulation of the unit, caused by the HP 346C source impedance change in the ON and OFF state.
Noise Figures and other parameters degrade below 500 MHz.

Performance Graphs

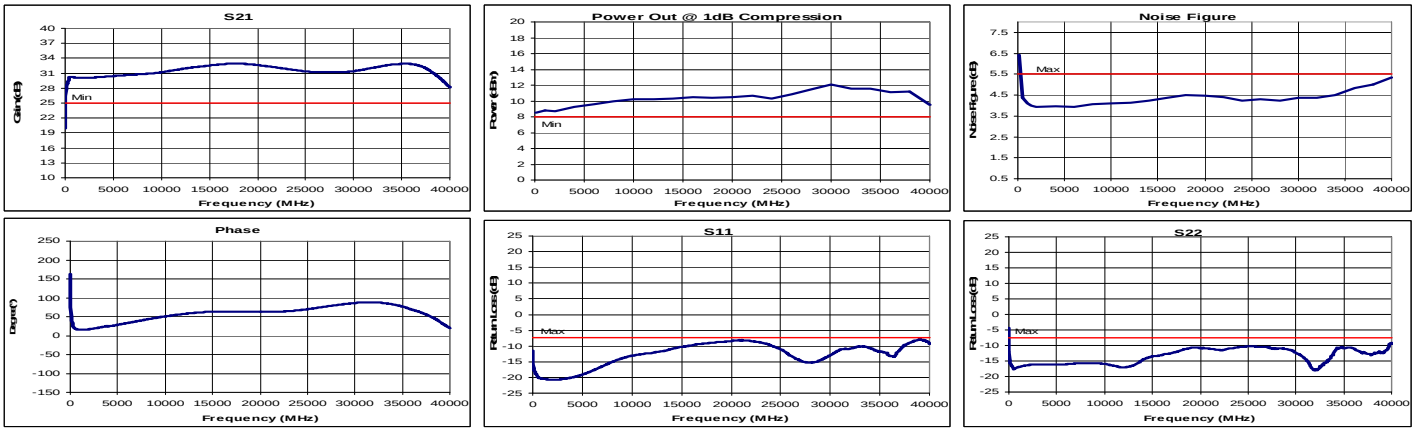

Outline Drawing

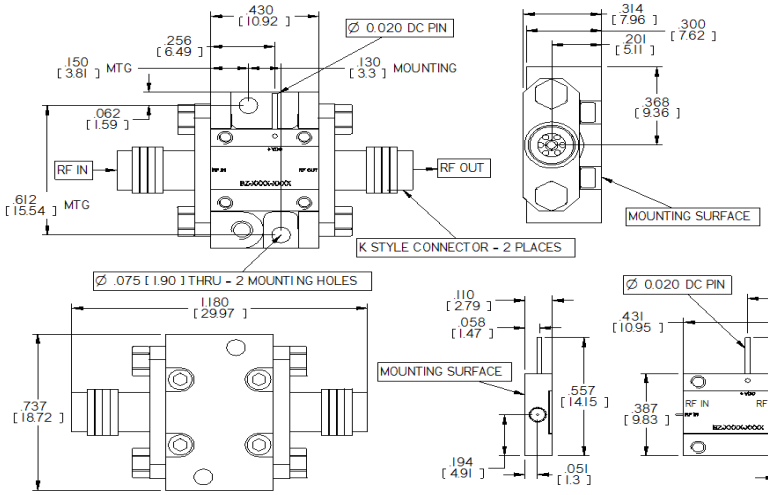

Mounting Drawing

00194

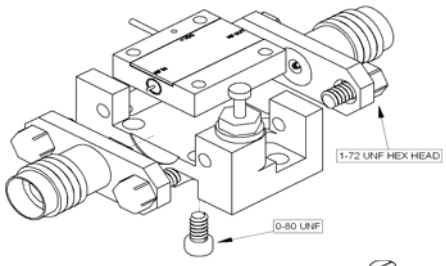

Drop In Module

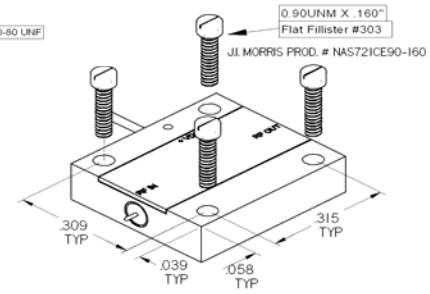

B&Z Technologies • 25 Health Sciences Drive • Stony Brook • New York 11790
Phone: (631) 444-8827 • Fax: (631) 444-8825 • info@bnztech.com • www.bnztech.com